Fewer Leak Points. Simplified Maintenance.

Swagelok Seal Flush Plan Components

Swagelok Seal Flush Plan components help keep your rotating equipment running efficiently, with less downtime and fewer leaks. Our 2-inch and under components replace traditional threaded and welded pipe connections with bent tubing, tube fittings and other quality parts[1]. Custom configurations and critical spares are available through your local Swagelok sales and service center.

[1]API 682, 4th edition supports the use of tubing for mechanical seal support systems.

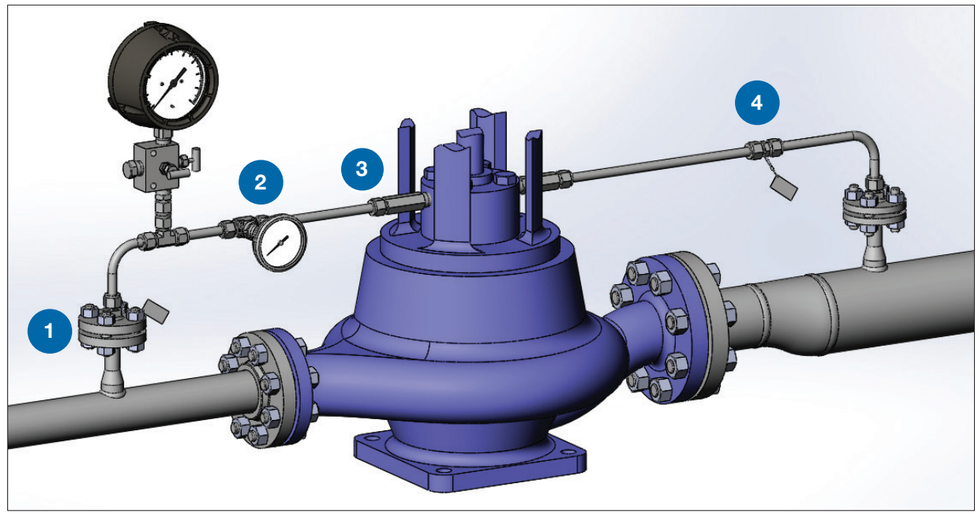

Improve the Way You Connect.

1 Integral Orifice Flange Adapter

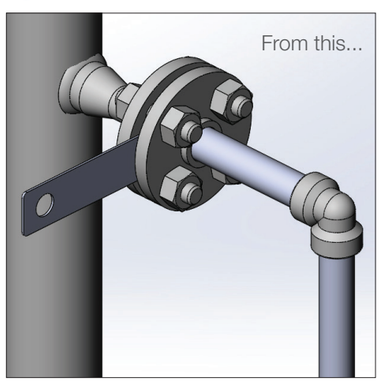

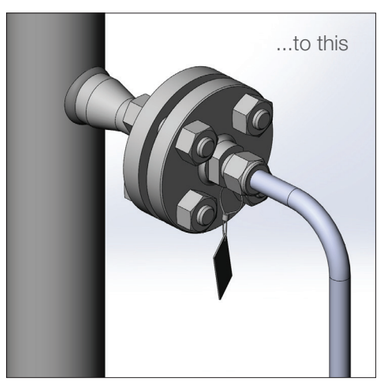

Replace threaded or welded flange assemblies with a one-piece flange adapter with an integral orifice.

2 Thermowell Tees

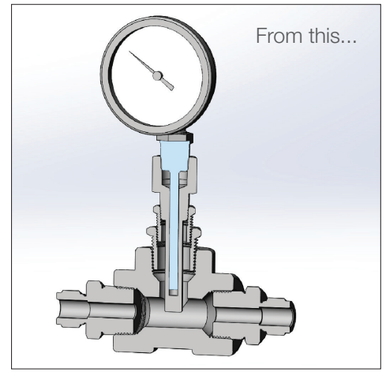

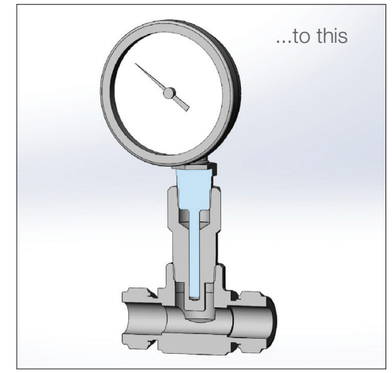

Reduce threaded connections and monitor temperature with integrated thermowell pre-welded into tube fitting tee for ease of installation.

3 Extended Male Connector

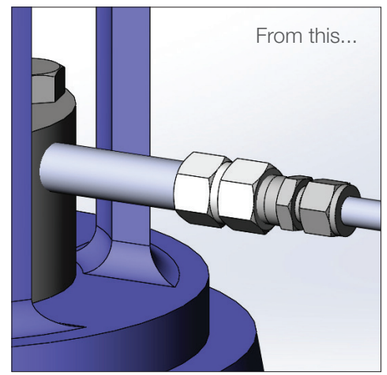

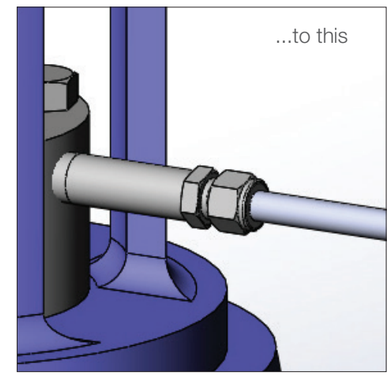

Eliminate threaded pipe and potential leak points with a single fitting. Available in 4- and 6- inch lengths, to allow you to clear the shroud and go straight from the gland to your tubing run in one piece.

4 Orifice Union

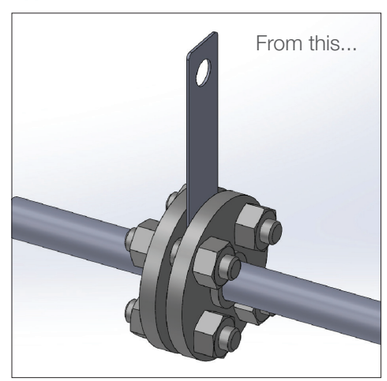

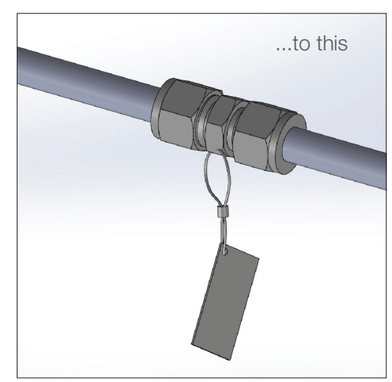

Easily add an orifice to a flush system with the orifice union. This fitting makes welding bulky flange assemblies unnecessary. Tagged for visual identification.

Find Out More. Contact your local Sales and Service Center today.

Swagelok

Extended Male Connector Hex Shank

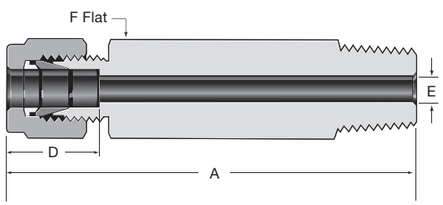

Tube OD	NPT Size	Ordering Number	Dimensions A	D	E	F	Pressure Rating
Dimensions, in. (mm)							psig (bar)
3/8	3/8	SS-600-1-6-50553	4.00 (102)	0.66 (16.8)	0.28 (7.1)	11/16	7500 (516)
		SS-600-1-6-49485	6.00 (152)				
1/2	1/2	SS-810-1-8-50553	4.00 (102)	0.90 (22.9)	0.41 (10.4)	7/8	6700 (461)
		SS-810-1-8-49485	6.00 (152)				
3/4	1/2	SS-1210-1-8-50553	4.00 (102)	0.96 (24.4)	0.63 (16.0)	1 1/16	5800 (399)
		SS-1210-1-8-49485	6.00 (152)				
	3/4	SS-1210-1-12-50553	4.00 (102)				
		SS-1210-1-12-49485	6.00 (152)				
Dimensions, mm (in.)							bar (psig)
12	1/2	SS-12MO-1-8-50553	102 (4.00)	22.8 (0.90)	9.5 (0.37)	22	470 (6821)
		SS-12MO-1-8-49485	152 (6.00)				

Extended Male Connector Machined Shank

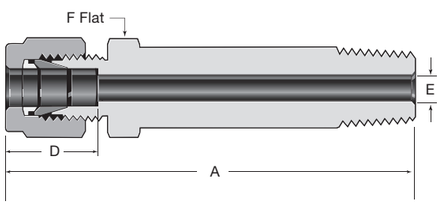

Tube OD	NPT Size	Ordering Number	Dimensions A	D	E	F	Pressure Rating
Dimensions, in. (mm)							psig (bar)
3/8	3/8	SS-600-1-6-52166	4.00 (102)	0.66 (16.8)	0.28 (7.1)	11/16	7500 (516)
		SS-600-1-6-52167	6.00 (152)				
1/2		SS-810-1-6-52166	4.00 (102)				
		SS-810-1-6-52167	6.00 (152)				
	1/2	SS-810-1-8-52166	4.00 (102)	0.90 (22.9)	0.41 (10.4)	7/8	6700 (461)
		SS-810-1-8-52167	6.00 (152)				
3/4	1/2	SS-1210-1-8-52166	4.00 (102)	0.96 (24.4)	0.63 (16.0)	1 1/16	5800 (399)
		SS-1210-1-8-52167	6.00 (152)				
	3/4	SS-1210-1-12-52166	4.00 (102)				
		SS-1210-1-12-52167	6.00 (152)				
Dimensions, mm (in.)							bar (psig)
12	1/2	SS-12MO-1-8-52166	102 (4.00)	22.8 (0.90)	9.5 (0.37)	22	470 (6821)
		SS-12MO-1-8-52167	152 (6.00)				
18	3/4	SS-18MO-1-12-52166	102 (4.00)	24.4 (0.96)	11.9 (0.47)	27	370 (5370)
		SS-18MO-1-12-52167	152 (6.00)				

Safe Product Selection
When selecting a product, the total system design must be considered to ensure safe, trouble-free performance. Function, material compatibility, adequate ratings, proper installation, operation, and maintenance are the responsibilities of the system designer and user.

Warranty Information

Swagelok products are backed by The Swagelok Limited Lifetime Warranty. For a copy, visit your Swagelok Web site or contact your authorized Swagelok representative.

Integral Orifice Class 300 ANSI Flange Adapter with Tag

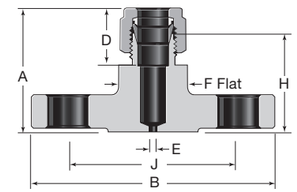

Tube OD	Flange Size	Ordering Number	Dimensions A	B	D	E	F	H	J	Pressure Rating
Dimensions, in. (mm)										psig (bar)
1/2	3/4	SS-810-F12-300-43359	1.96 (49.8)	4.62 (117)	0.90 (22.9)	0.125 (3.2)	1.06 (26.9)	1.56 (39.6)	3.25 (82.6)	720 (49.6)
	1/2	SS-810-F8-300-43359	1.90 (48.3)	3.75 (95.3)				1.50 (38.1)	2.62 (66.5)	
3/4	3/4	SS-1210-F12-300-43359	2.04 (51.8)	4.62 (117)	0.96 (24.4)		1.50 (38.1)	1.64 (41.7)	3.25 (82.6)	
Dimensions, mm (in.)										bar (psig)
12	3/4	SS-12MO-F12-300-43359	49.8 (1.96)	117 (4.62)	22.9 (0.90)	3.2 (0.125)	26.9 (1.06)	39.6 (1.56)	82.6 (3.25)	49.6 (720)

Union Orifice Adapter with Lanyard

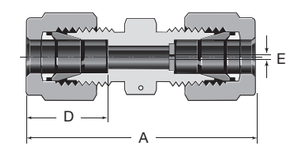

Tube OD	Ordering Number	Dimensions A	D	E	Pressure Rating
Dimensions, in. (mm)					psig (bar)
1/2	SS-810-6PD-50174	2.02 (51.3)	0.90 (22.9)	0.125 (3.2)	6700 (461)
3/4	SS-1210-6PD-50174	2.11 (53.6)	0.96 (24.2)		5800 (399)

Please include E-dimension at time of order. E-dimension will be between 0.125 in. (0.3 mm) and maximum E-dimension for size of tube fitting.

Orifice Adapter

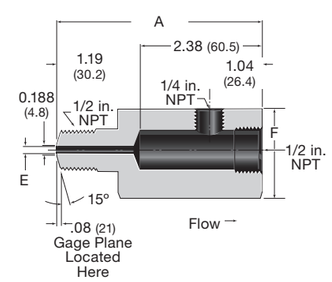

Tube OD	Female NPT	Ordering Number	Dimensions A	E	F	Pressure Rating
Dimensions, in. (mm)						psig (bar)
1/2	1/2	SS-8-A-08097	4.00 (102)	0.125 (3.2)	1 5/8	4900 (337)
3/4		SS-12-R8-8-08096			1 1/16	

Thermowell Tee

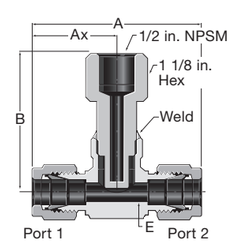

Straight Pattern

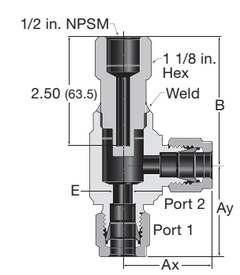

Angle Pattern

Tube OD	Ordering Number	Dimensions A	Ax	Ay	B	E	Pressure Rating
Dimensions, in. (mm)							psig (bar)
3/8	SS-TTW-S6	2.84 (72.1)	1.42 (36.1)		2.86 (72.7)	0.28 (7.1)	4900 (337)
1/2	SS-TTW-S8	3.06 (77.7)	1.53 (38.9)			0.41 (10.4)	
3/4	SS-TTW-S12	3.52 (89.4)	1.76 (44.7)		2.96 (75.2)	0.62 (15.7)	4600 (316)
Dimensions, mm (in.)							bar (psig)
12	SS-TTW-S12MM	77.7 (3.06)	38.9 (1.53)		72.7 (2.86)	9.5 (0.73)	337 (4900)
16	SS-TTW-S16MM					12.7 (0.50)	

Refer to *Temperature Measurement Devices, Bimetal Thermometers and Thermowells* catalog, MS-02-353, for additional information.

© 2018 Swagelok Company, Swagelok TM – Swagelok Company. MS-02-483, Rev-, June 2018